S22NV - 110V AC - true union 2-way solenoid valve

2 way solenoid valve with NPT threaded female union ends.

Function: Normally closed. Power supply: 110V AC

The solenoid valve is the ideal solution for applications requiring many rapid actuation cycles and installations in confined spaces. Thanks to the absence of metal parts in contact with the fluid or the external environment, it can also be used in the presence of aggressive fluids. Ideal for use in fertigation benches.

- Installation flexibility and ease of maintenance: high-performance solenoid electric actuator with internal moving parts designed to exceed 5 million maintenance free operating cycles. Adjustable circular section coil with IP65 protection class.
- DIN 43650 electrical connector supplied as standard: includes LED indicator light and rectifier (in the case of an AC coil).
- Lever shutter in EPDM or FKM and lever in stainless steel.
- Suitable for use with aggressive fluids: no metal component in contact with the fluid or the external environment; all the screws are covered by PE protection plugs.
- Emergency override

- 2-Way PVC-U body
- Installation flexibility and ease of maintenance: high-performance solenoid electric actuator designed to exceed 5 million maintenance-free operating cycles
- Adjustable circular section coil with IP65 protection class.
- Integrated override with the possibility of being installed in 3 different positions.
- Lever shutter in EPDM or FKM and lever in stainless steel.
- DIN 43650 electrical connector supplied as standard: includes LED indicator light and rectifier (in the case of an AC coil).

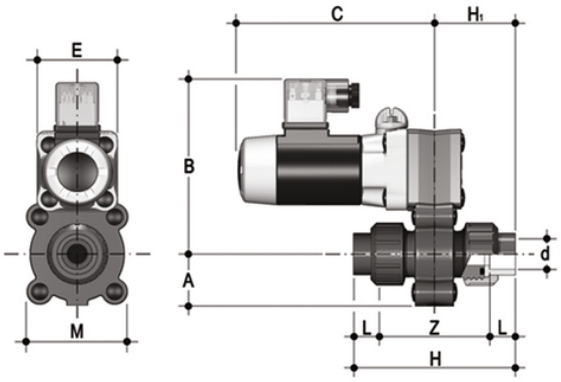

EPDM

Reference	d	DN	A	B	C	H	H1	L	Z	E	M	g
S22NV0838E110A	3/8"	8	34	115	130	103	51,5	16	71	54	67	1000

All information subject to change.

Please contact us on https://www.aliaxis.co.uk/get-in-touch for further informations

S22NV - 110V AC - true union 2-way solenoid valve

Reference	d	DN	A	B	C	H	H1	L	Z	E	M	g
S22NV0812E110A	1/2"	8	34	115	130	112	56	20,5	71	54	67	1000
S22NV1038E110A	3/8"	10	34	115	130	103	51,5	16	71	54	67	1000
S22NV1012E110A	1/2"	10	34	115	130	112	56	20,5	71	54	67	1000
S22NV1538E110A	3/8"	15	34	115	130	103	51,5	16	71	54	67	1000
S22NV1512E110A	1/2"	15	34	115	130	112	56	20,5	71	54	67	1000

S22NV - 110V AC - true union 2-way solenoid valve

Reference	d	DN	A	B	C	H	H1	L	Z	E	M	g
S22NV0838F110A	3/8"	8	34	115	130	103	51,5	16	71	54	67	1000
S22NV0812F110A	1/2"	8	34	115	130	112	56	20,5	71	54	67	1000
S22NV1038F110A	3/8"	10	34	115	130	103	51,5	16	71	54	67	1000
S22NV1012F110A	1/2"	10	34	115	130	112	56	20,5	71	54	67	1000
S22NV1538F110A	3/8"	15	34	115	130	103	51,5	16	71	54	67	1000
S22NV1512F110A	1/2"	15	34	115	130	112	56	20,5	71	54	67	1000

All information subject to change.

Please contact us on https://www.aliaxis.co.uk/get-in-touch for further informations